DocuSign Envelope ID: E3A47E2C-B026-45A6-89D4-8A895974CF0D

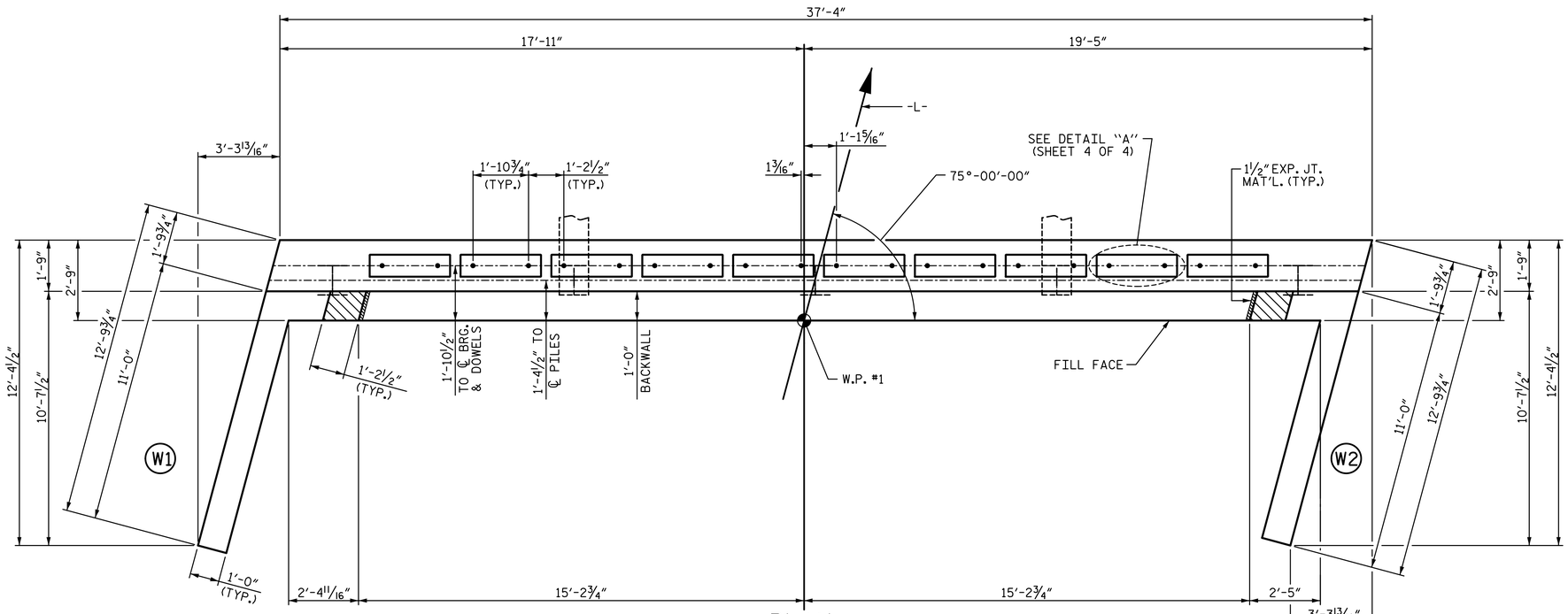

PLAN

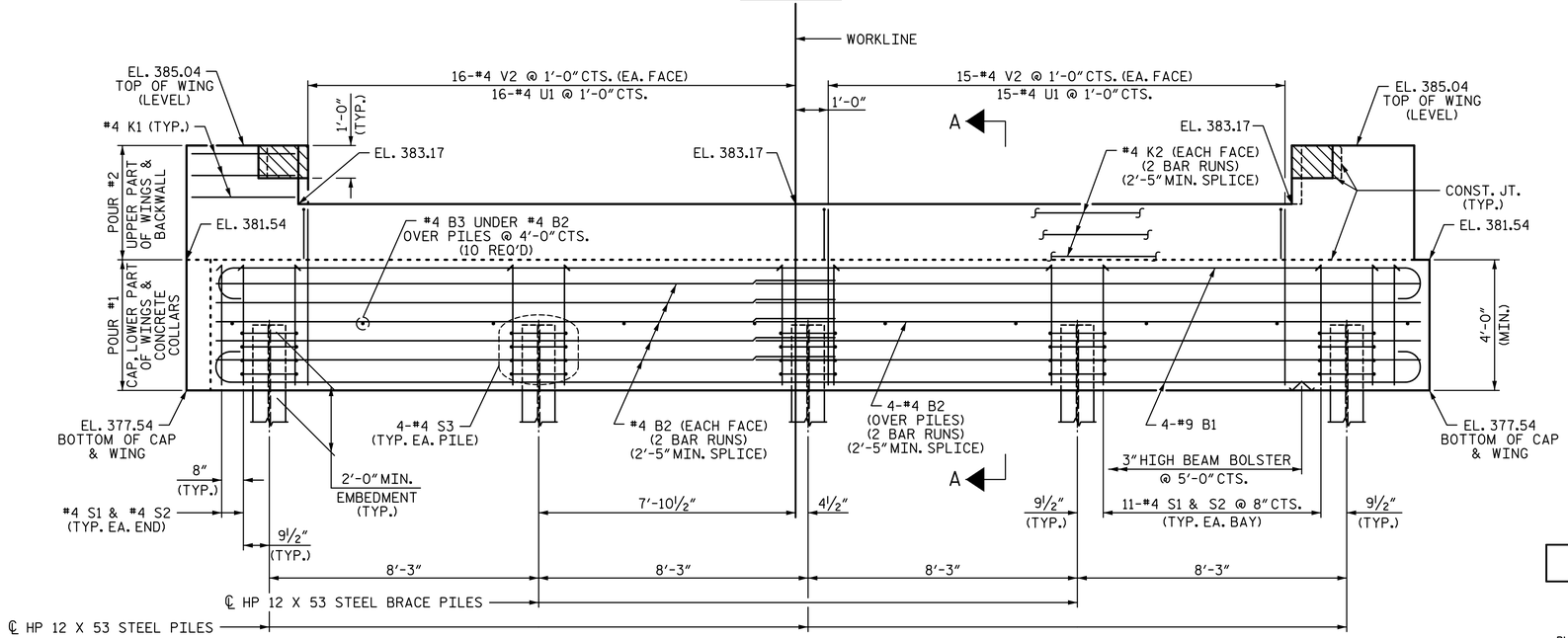

ELEVATION

WINGS NOT SHOWN FOR CLARITY.
FOR SECTION A-A, SEE SHEET 4 OF 4.
CONCRETE COLLARS FOR STEEL PILES NOT SHOWN IN PLAN AND ELEVATION VIEWS FOR CLARITY.
SEE 'CORROSION PROTECTION FOR STEEL PILES DETAIL", SHEET 4 OF 4.

NOTES:

STIRRUPS IN CAP MAY BE SHIFTED AS NECESSARY TO CLEAR DOWELS.

THE CONCRETE IN THE SHADED AREA OF THE WING SHALL BE POURED AFTER THE VERTICAL CONCRETE BARRIER RAIL IS CAST IF SLIP FORMING IS USED.

FOR PILE SPLICE DETAILS, SEE SHEET 4 OF 4.

FOR WING DETAILS, SEE SHEET 3 OF 4.

PRELIMINARY PLANS DO NOT USE FOR CONSTRUCTION

PROJECT NO. 17BP.5.R.52
GRANVILLE COUNTY
STATION: 16+00.00 -L-

SHEET 1 OF 4

DOCUMENT NOT CONSIDERED FINAL UNLESS ALL SIGNATURES COMPLETED

STATE OF NORTH CAROLINA
DEPARTMENT OF TRANSPORTATION
RALEIGH

SUBSTRUCTURE

END BENT 1

PLANS PREPARED BY:
SIMPSON ENGINEERS & ASSOCIATES
5640 Dillard Drive
Suite 200
Cary, NC 27518
(919) 852-0468
(919) 852-0598 (Fax)
www.simpsonengr.com
LICENSURE NO. C-2521

NORTH CAROLINA PROFESSIONAL SEAL 11268 ENGINEER BETSY S. COX
12/18/2015

REVISIONS						SHEET NO.
NO.	BY:	DATE:	NO.	BY:	DATE:	S-10
1			3			TOTAL SHEETS
2			4			16

DRAWN BY: S.D. COOPER DATE: 4-15
CHECKED BY: B.S. COX DATE: 4-15
DESIGN ENGINEER OF RECORD: B.S. COX DATE: 4-15

12/17/2015 2:29:05 PM G:\Projects\2014\17BP5R52 (Granville 93)\Structures\Drawings\Final\Granville 93_endbents.dgn