DocuSign Envelope ID: E3A47E2C-B026-45A6-89D4-8A895974CF0D

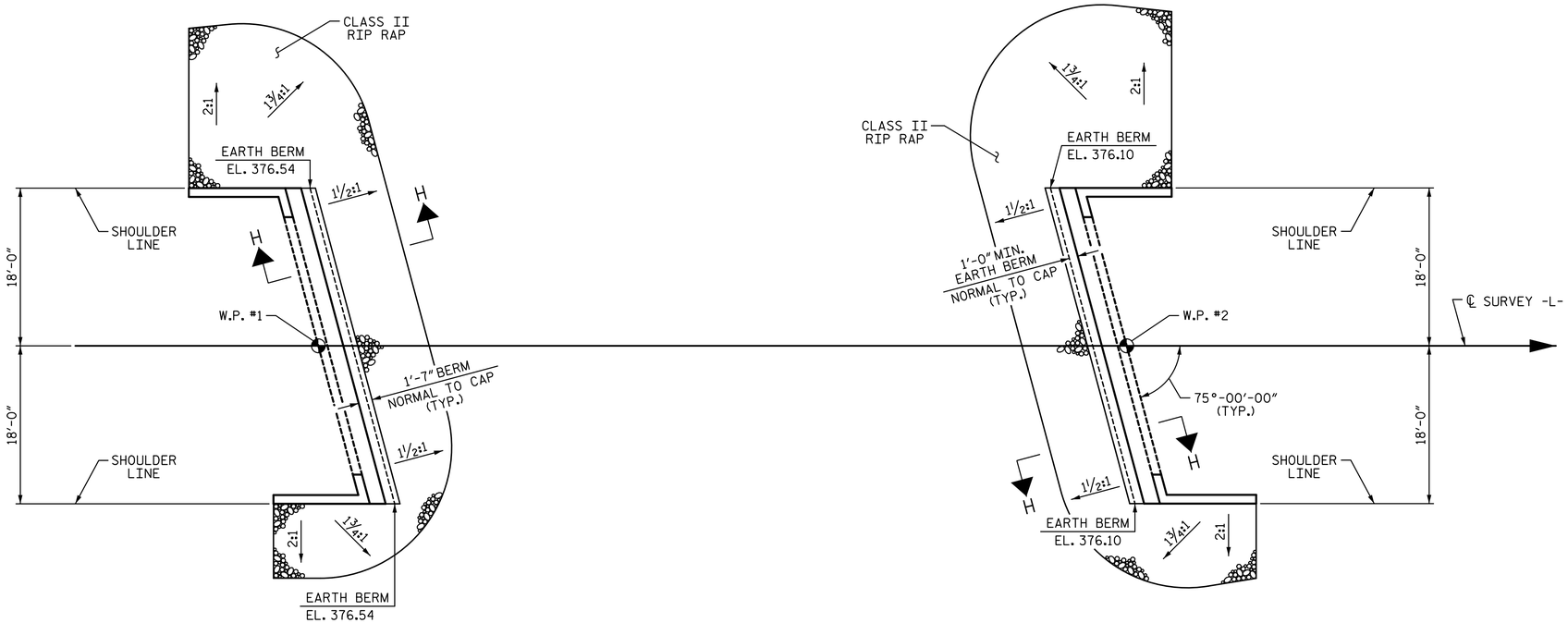

@ END BENT 1

@ END BENT 2

PLAN OF RIP RAP

ESTIMATED QUANTITIES		
BRIDGE @ STA. 16+00.00 -L-	RIP RAP CLASS II (2'-0" THICK)	GEOTEXTILE FOR DRAINAGE
	TONS	SQUARE YARDS
END BENT 1	120	135
END BENT 2	110	125

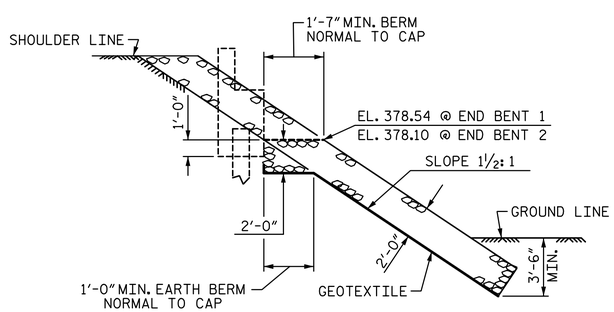

SECTION H-H

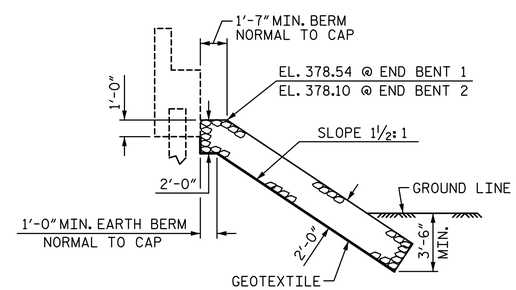

℄ SECTION BERM RIP RAPPED

PRELIMINARY PLANS
DO NOT USE FOR CONSTRUCTION

PROJECT NO. 17BP.5.R.52

GRANVILLE COUNTY

STATION: 16+00.00 -L-

DOCUMENT NOT CONSIDERED FINAL UNLESS ALL SIGNATURES COMPLETED

PLANS PREPARED BY:

SIMPSON ENGINEERS & ASSOCIATES
5640 Dillard Drive
Suite 200
Cary, NC 27518
(919) 852-0468
(919) 852-0598 (Fax)
www.simpsonengr.com
LICENSURE NO. C-2521

NORTH CAROLINA PROFESSIONAL SEAL 11268 ENGINEER BETSY S. COX
12/18/2015

STATE OF NORTH CAROLINA
DEPARTMENT OF TRANSPORTATION
RALEIGH

RIP RAP DETAILS

REVISIONS						SHEET NO.
NO.	BY:	DATE:	NO.	BY:	DATE:	S-14
1			3			TOTAL SHEETS
2			4			16

DRAWN BY: S.D. COOPER DATE: 4-15
CHECKED BY: B.S. COX DATE: 4-15
DESIGN ENGINEER OF RECORD: B.S. COX DATE: 4-15

12/17/2015 2:29:06 PM G:\Projects\2014\17BP5R52 (Granville 93)\Structures\Drawings\Final\Granville 93_rr.dgn