DocuSign Envelope ID: E3A47E2C-B026-45A6-89D4-8A895974CF0D

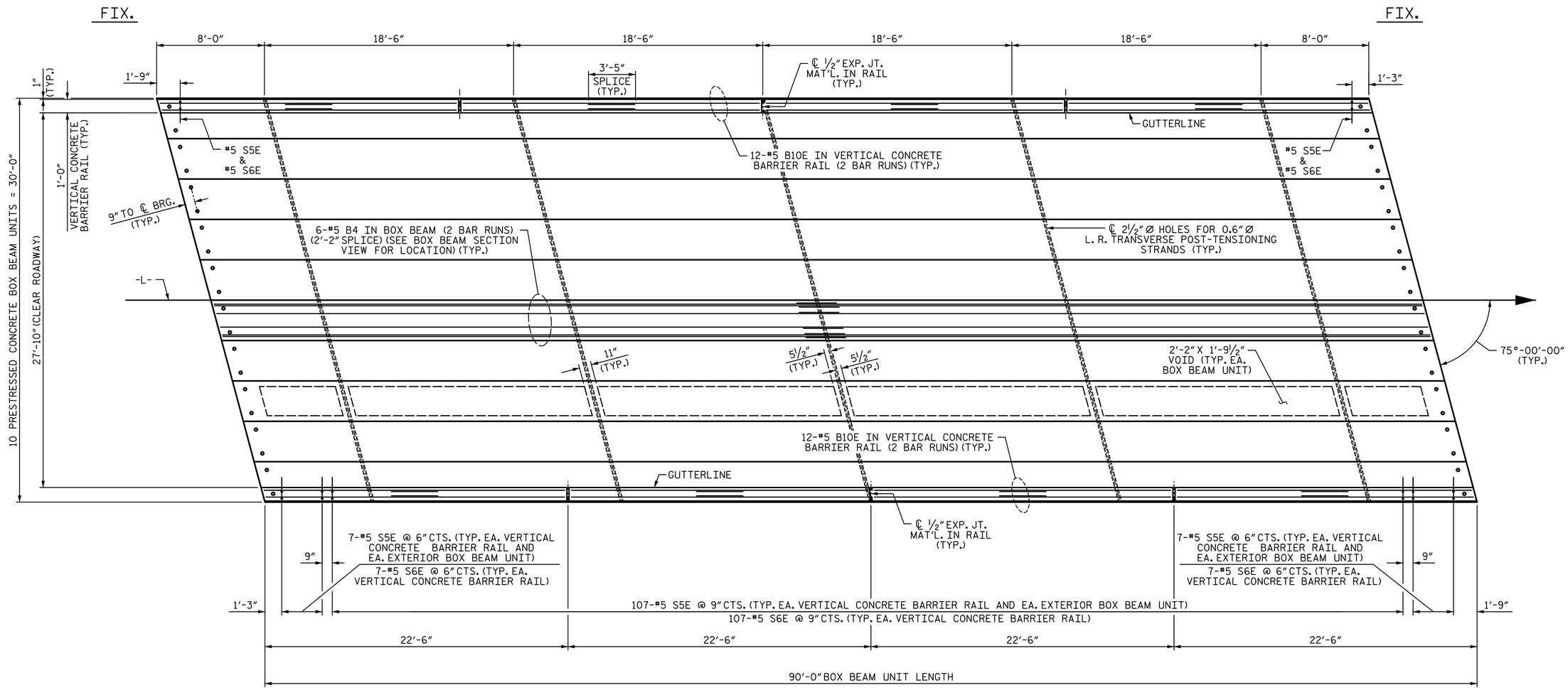

PLAN OF UNIT

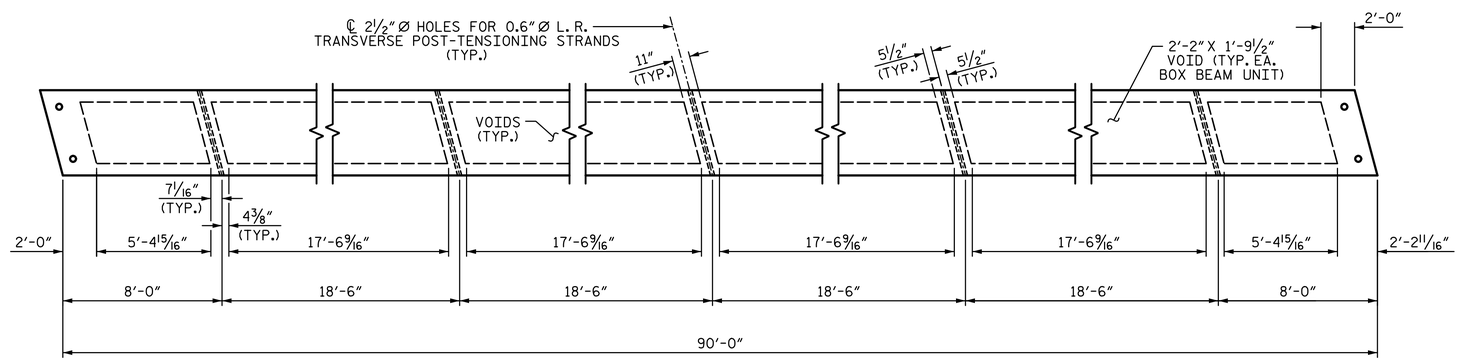

DIAPHRAGM AND VOID LAYOUT

PRELIMINARY PLANS
DO NOT USE FOR CONSTRUCTION

PROJECT NO. 17BP.5.R.52
GRANVILLE COUNTY
STATION: 16+00.00 -L-

SHEET 2 OF 5

DOCUMENT NOT CONSIDERED FINAL UNLESS ALL SIGNATURES COMPLETED

PLANS PREPARED BY:
SIMPSON ENGINEERS & ASSOCIATES
5640 Dillard Drive
Suite 200
Cary, NC 27518
(919) 852-0468
(919) 852-0598 (Fax)
www.simpsonengr.com
LICENSURE NO. C-2521

NORTH CAROLINA PROFESSIONAL SEAL 11268 ENGINEER BETSY S. COX
12/18/2015

STATE OF NORTH CAROLINA
DEPARTMENT OF TRANSPORTATION
RALEIGH
SUPERSTRUCTURE

PLAN OF SPAN

27'-10" CLEAR ROADWAY - 75° SKEW

REVISIONS								SHEET NO.
NO.	BY:	DATE:	NO.	BY:	DATE:			S-5
1			3					TOTAL SHEETS
2			4					16

DRAWN BY:	S.D. COOPER	DATE:	4-15
CHECKED BY:	B.S. COX	DATE:	4-15
DESIGN ENGINEER OF RECORD:	B.S. COX	DATE:	4-15

12/17/2015 2:29:04 PM G:\Projects\2014\17BP5R52 (Granville 93)\Structures\Drawings\Final\Granville 93_superstructure.dgn