DocuSign Envelope ID: E3A47E2C-B026-45A6-89D4-8A895974CF0D

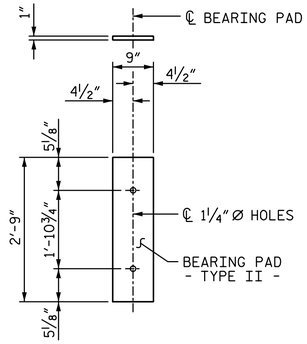

FIXED END
(TYPE II - 20 REQ'D)

ELASTOMERIC BEARING DETAILS

ELASTOMER IN ALL BEARINGS SHALL BE 60 DUROMETER HARDNESS.

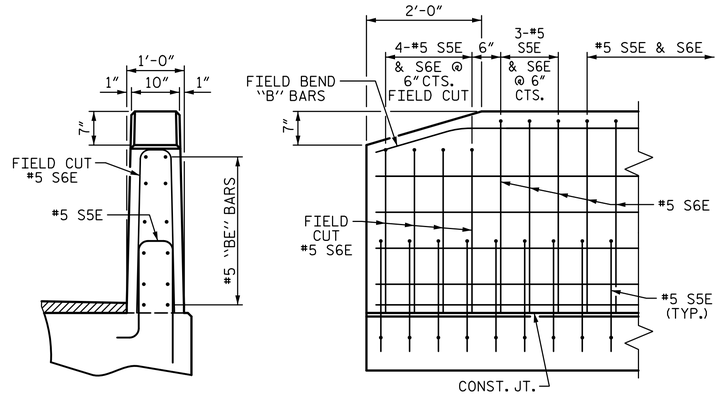

END VIEW

SIDE VIEW

END OF RAIL DETAILS

BOX BEAM UNITS REQUIRED			
	NUMBER	LENGTH	TOTAL LENGTH
EXTERIOR B.B.	2	90'-0"	180'-0"
INTERIOR B.B.	8	90'-0"	720'-0"
TOTAL	10	———	900'-0"

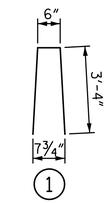

BAR TYPE

BAR DIMENSIONS ARE OUT TO OUT

BILL OF MATERIAL FOR VERTICAL CONCRETE BARRIER RAIL					
BAR	BARS PER PAIR OF EXTERIOR UNITS	SIZE	TYPE	LENGTH	WEIGHT
	90' UNIT				
B10E	192	#5	STR	12'-10"	2570
S6E	242	#5	1	7'-2"	1809
"E" EPOXY COATED REINFORCING STEEL			LB		4379
CLASS AA CONCRETE			CY		23.3
TOTAL VERTICAL CONCRETE BARRIER RAIL			LF		180.0

GUTTERLINE ASPHALT THICKNESS & RAIL HEIGHT		
	ASPHALT OVERLAY THICKNESS @ MID-SPAN	RAIL HEIGHT @ MID-SPAN
90' UNITS	1¾"	3'-7¾"

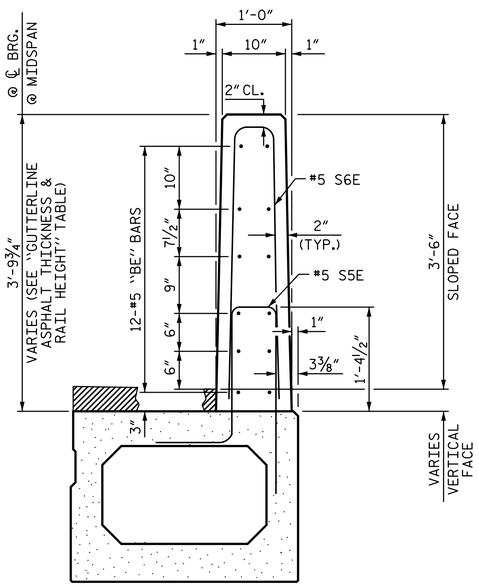

SECTION THRU RAIL

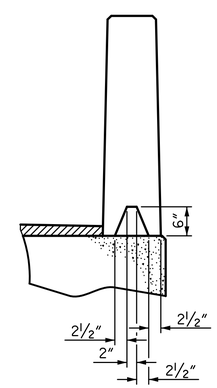

SECTION S-S

AT DAM IN OPEN JOINT
(THIS IS TO BE USED ONLY
WHEN SLIP FORM IS USED)

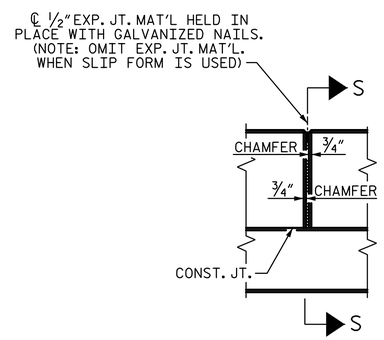

ELEVATION AT EXPANSION JOINTS

VERTICAL CONCRETE BARRIER RAIL DETAILS

PRELIMINARY PLANS
DO NOT USE FOR CONSTRUCTION

PROJECT NO. 17BP.5.R.52
GRANVILLE COUNTY
STATION: 16+00.00 -L-

SHEET 5 OF 5

DOCUMENT NOT CONSIDERED FINAL
UNLESS ALL SIGNATURES COMPLETED

PLANS PREPARED BY:

SIMPSON ENGINEERS & ASSOCIATES
5640 Dillard Drive
Suite 200
Cary, NC 27518
(919) 852-0468
(919) 852-0598 (Fax)
www.simpsonengr.com
LICENSURE NO. C-2521

NORTH CAROLINA PROFESSIONAL SEAL ENGINEER BETSY S. COX
12/18/2015

STATE OF NORTH CAROLINA
DEPARTMENT OF TRANSPORTATION
RALEIGH

SUPERSTRUCTURE
3'-0" X 2'-9"
PRESTRESSED CONCRETE
BOX BEAM UNIT
75° SKEW

REVISIONS								SHEET NO.
NO.	BY:	DATE:	NO.	BY:	DATE:			S-8
1			3					TOTAL SHEETS
2			4					16

DRAWN BY:	S.D. COOPER	DATE:	4-15
CHECKED BY:	B.S. COX	DATE:	4-15
DESIGN ENGINEER OF RECORD:	B.S. COX	DATE:	4-15

12/17/2015 2:29:04 PM G:\Projects\2014\17BP5R52 (Granville 93)\Structures\Drawings\Final\Granville 93_superstructure.dgn